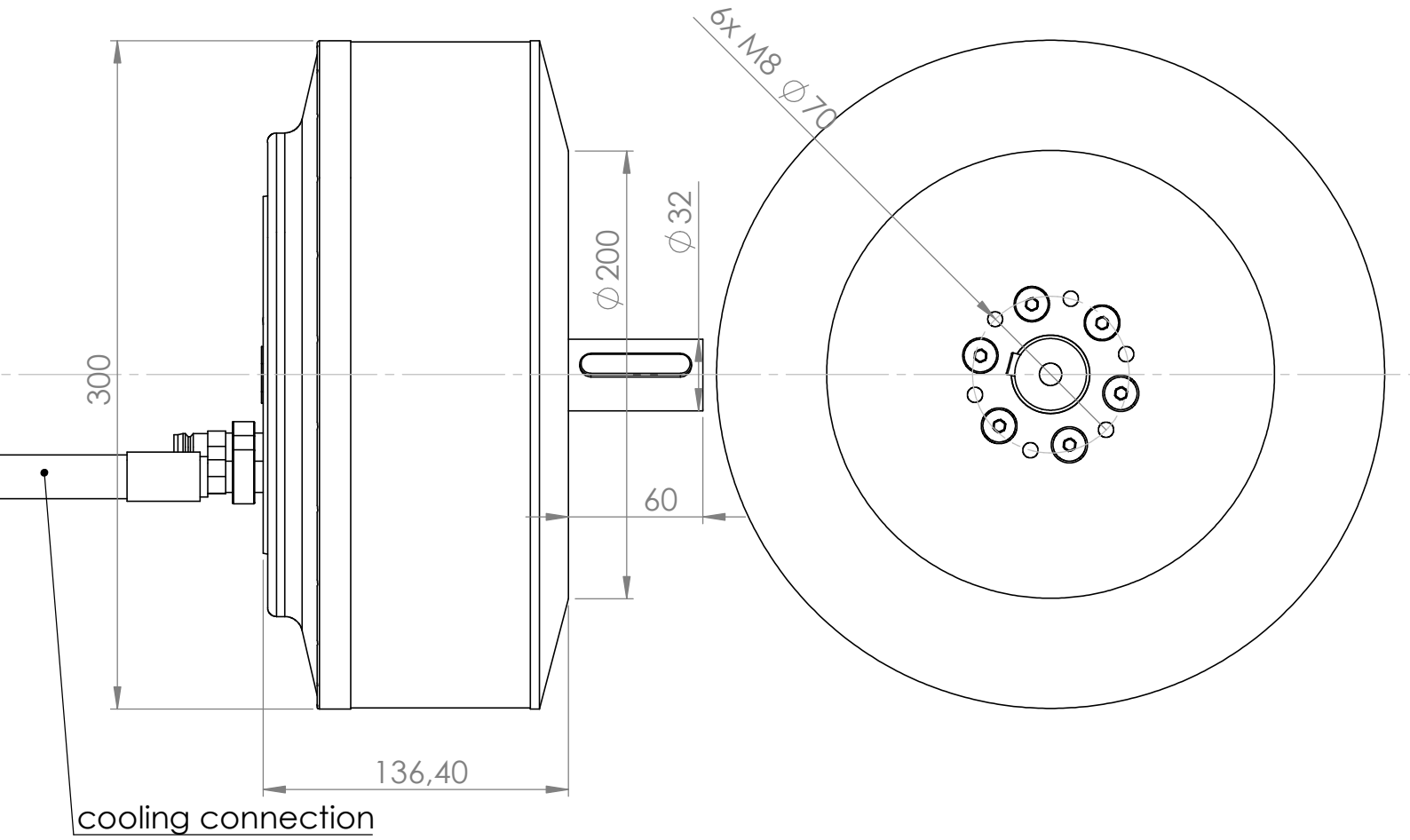
6x M8 ⌀70
⌀32
⌀200
300
60
136,40
cooling connection

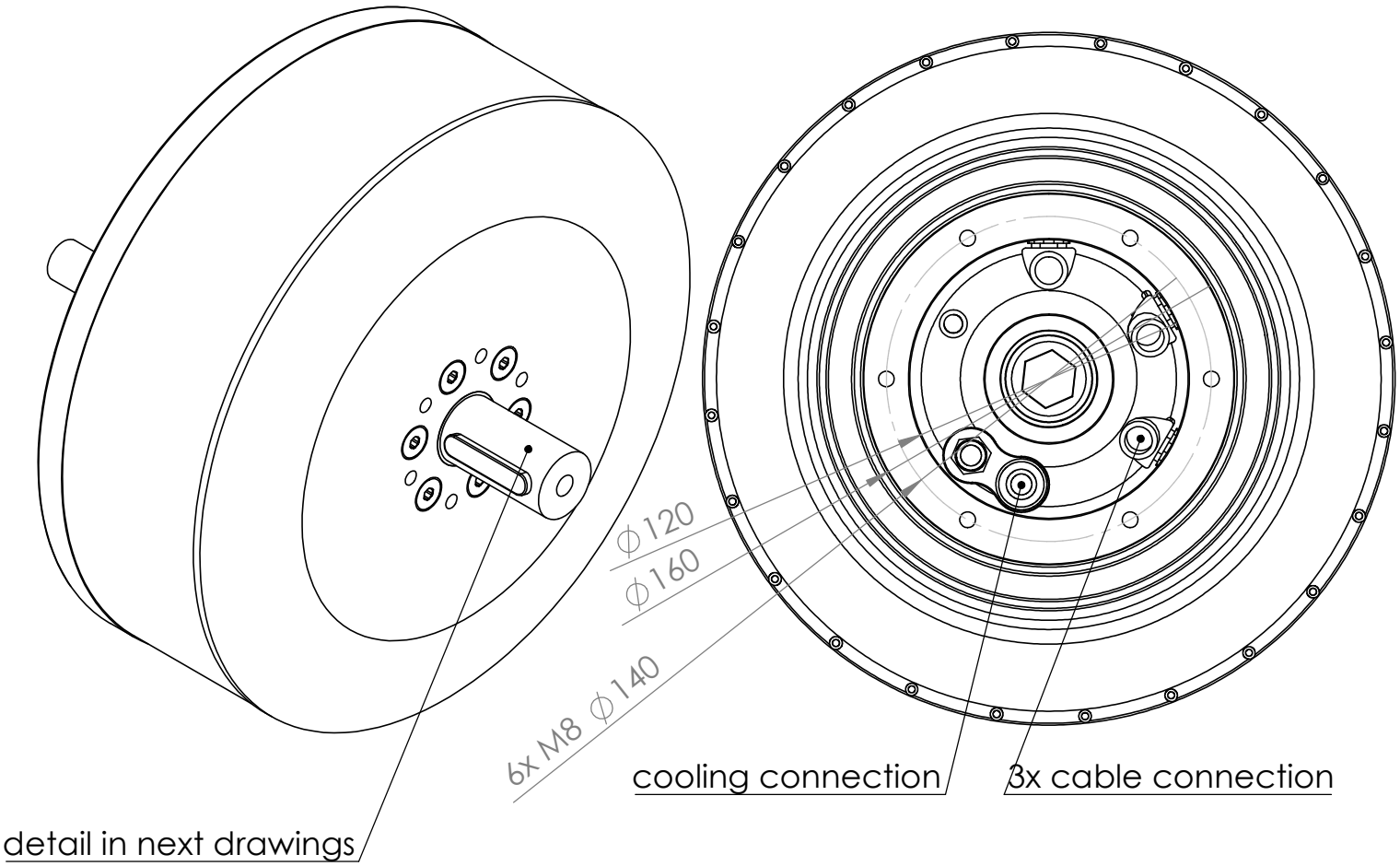
⌀120
⌀160
6x M8 ⌀140
cooling connection
3x cable connection
detail in next drawings